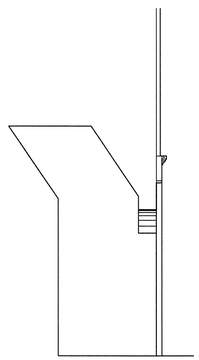

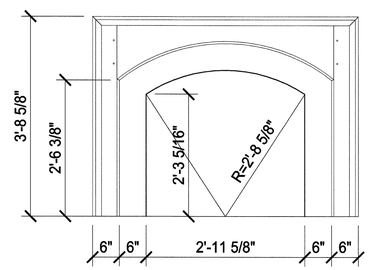

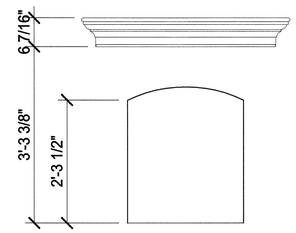

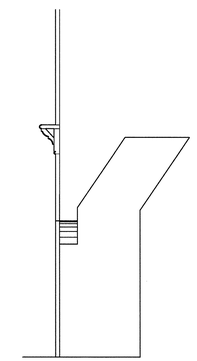

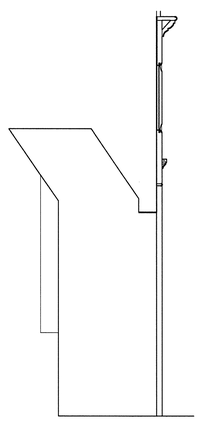

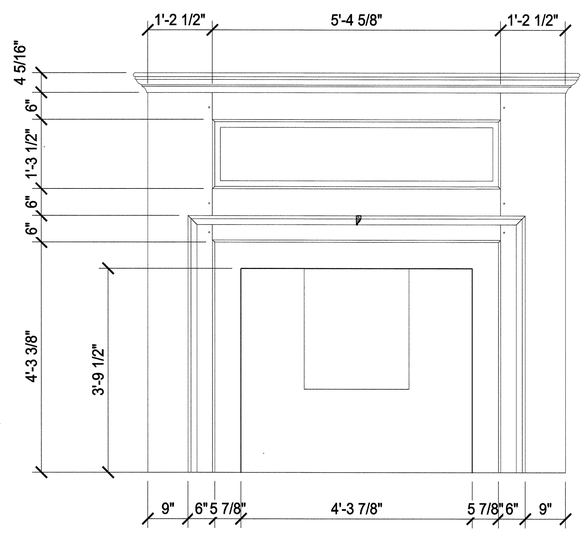

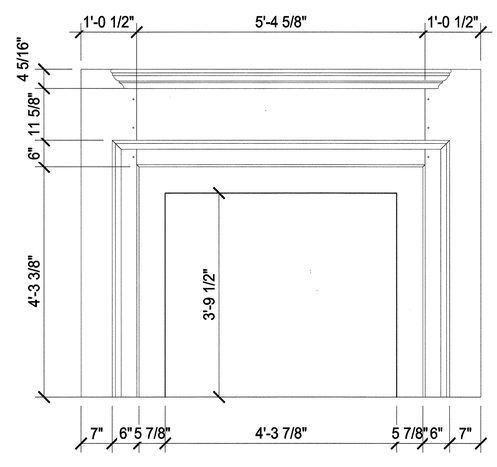

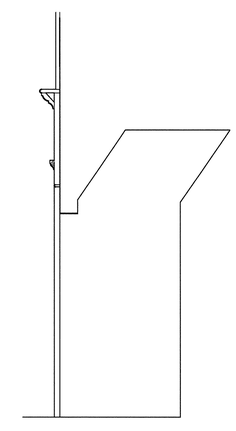

NORTH MANTELS

SOUTH MANTELS

PRINTS ISSUED

DATE	No.	TO WHOM

CONTRACTOR SHALL VERIFY ALL DIMENSIONS AND TAKE OWN MEASUREMENTS AT THE JOB SITE BEFORE COMMENCING WORK. ADVISE OF ANY ERROR OR DISCREPANCY.

REVISIONS

PROJ. NO.	PROJECT OR SITE
	James Monroe Birthplace

TITLE: MANTEL DETAILS

NUMBER: A 3

SCALE	DATE	DRAWN	CHECKED	APPROVED	BLK. BLDG.
3/4"=1'	5.13.2009	JEK			

THE COLONIAL WILLIAMSBURG FOUNDATION

DEPARTMENT OF ARCHITECTURAL RESEARCH